International Journal of
Emerging Research in Management &Technology
ISSN: 2278-9359

Research Article | **January 2013**

Vector control of a Grid Interface Wind-DFIG Hybrid System with SOFC Fuel cell

Ritika Verma*
Electrical & Electronics Department
LNCT Bhopal (MP)-india

Prof.Amol Barve
Electrical & Electronics Department
LNCT, Bhopal (MP)-india

Abstract **—This paper deals with the analysis, modelling, and control of a doubly-fed induction generator (DFIG) driven by the wind turbine to interface the fuel cell system with standalone/grid applications. The issue of renewable energy is becoming significant due to increasing power demand, instability of the rising oil prices and environmental problems. Among the various renewable energy sources, fuel cell is gaining more popularity due to their higher efficiency, cleanliness and cost-effective supply of power demanded by the consumers. Wind Energy is gaining interest now-a – days as one of the most important renewable sources of energy due to its eco-friendly nature. The most common machine which is widely used in these days is Doubly-fed Induction Machine. These types of machines can be used resolutely as a generator or motor. It presents a procedure for design and selection of the components and a vector control algorithm. The proposed control technique is presented for extracting the maximum power from the wind turbine. The wind energy conversion system (WECS) is equipped with a DFIG and two back-to-back Pulse Width Modulated (PWM) Insulated Gate Bipolar Transistors (IGBTs) based voltage source converters (VSCs) in the rotor circuit. The proposed control technique is based on using the grid-side converter to regulate the dc link voltage constant. The task of the rotor side converter is to track the maximum power point for the wind turbine and to maintain unity power factor at stator terminals. The description for the proposed system is presented with the detailed dynamic modeling equations. Simulation results for different operating conditions are demonstrated to reveal the performance of the proposed technique. Corresponding simulation results under unity power factor operating conditions are presented to demonstrate the effectiveness of the control technique.**

***Keywords*— Doubly-Fed Induction Generator (DFIG), Wind Energy Conversion System (WECS), RSC (Rotor side controller), GSC (Grid side converter), SOFC (Solid Oxide Fuel Cell system).**

I. INTRODUCTION

Recently, there has been rigorous research on the voltage and frequency control of squirrel cage type, but relatively little research efforts have been devoted to the use of the slip-ring induction machine for generator applications. although the slip-ring machine is more expensive and requires more maintenance, it permits rotor slip-power control when driven by a variable-speed turbine. ever increasing energy consumption for environmental protection and existing nature of fossil fuels, results much of the research work to focus on alternative/renewable energy sources. the small-scale generation systems such as wind turbine, photovoltaic, micro-turbines, fuel cells, etc. plays an important role to meet the consumers demand using the concepts of distributed generation. wind energy has emerged as the most viable source of electrical power and is economically competitive with conventional sources wind turbines use a doubly-fed induction generator (dfig) consisting of a wound rotor(slip ring) induction generator and an ac/dc/ac IGBT-based PWM converter. the statistical data conveys that doubly-fed induction generator (DFIG) based wind turbine with variable speed and variable pitch control is the most common wind turbine in the growing wind market. to harness the wind power efficiently the most reliable system in the present era is grid connected doubly fed induction generator. the stator winding is connected directly to the 50 hz grid while the rotor is fed at variable frequency through the ac/dc/ac converter. the DFIG technology allows extracting maximum energy from the wind for low wind speeds by optimizing the turbine speed, while minimizing mechanical stresses on the turbine during gusts of wind.

II. PRINCIPLE OF OPERATION

Figure.1shows the basic scheme adopted in the majority of systems. The stator is directly connected to the AC mains, whilst the wound rotor is fed from the Power Electronics Converter via slip rings to allow DFIG to operate at a variety of speeds in response to changing wind speed. The frequency of the grid voltage is always maintained constant irrespective of the wind speed (and thus the rotor speed), by the back-to-back converters. At sub-synchronous speeds the stator is generating the power but part of it has to be fed back to rotor. At super-synchronous speeds both the rotor and stator are producing power to the grid. The slip power can flow in both directions, i.e. to the rotor from the supply and from supply to the rotor and hence the speed of the machine can be controlled from either rotor- or stator-side converter in both super and sub-synchronous speed ranges. As a result, the machine can be controlled as a generator or a motor in both super and sub-synchronous operating modes realizing four operating modes. Below the synchronous speed in the motoring mode and above the synchronous speed in the generating mode, rotor-side converter operates as a rectifier and stator-side converter as an inverter, where slip power is returned to the stator. Below the synchronous speed in the generating mode

and above the synchronous speed in the motoring mode, rotor-side converter operates as an inverter and stator side converter as a rectifier, where slip power is supplied to the rotor. [5].

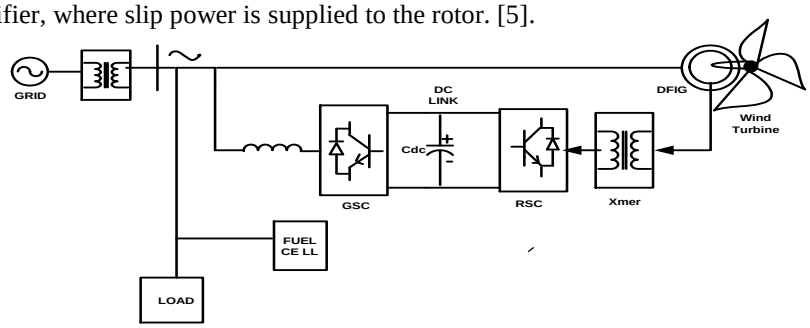

Fig1 Simulink configuration of DFIG-fuel cell test system

III. WECS and FUEL CELL system

A review of basic components and simulation of drive system is given here.

A. *Wind turbine*

The terms "wind energy" or "wind power" describe the process by which the wind is used to generate mechanical power by using kinetic energy of the wind. Wind Energy Conversion System (WECS) is the overall system for converting wind energy into useful mechanical energy that can be used to rotate an electrical generator for generating electricity. The WECS basically consists of three types of components: aerodynamics, mechanical, and electrical as shown in Figure 2.

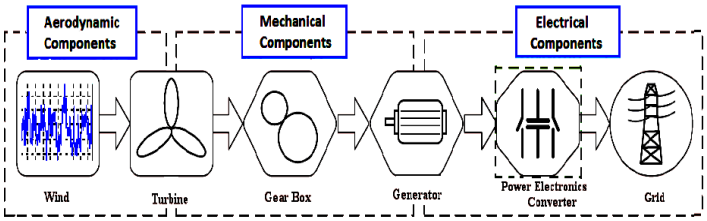

Fig2 .Block Diagram showing the components of WECS connected to grid [1]

Wind passes over the wind turbine blades, generating lift and exerting a turning force. The rotating blades turn a shaft inside the nacelle, which goes into a gearbox. The gearbox increases the rotational speed to that level which is appropriate for the generator, which uses magnetic fields to convert the rotational energy into electrical energy.

1) Aerodynamic component

- Wind Turbine Modeling(per unit)

The power contained in the wind turbine is given by the kinetic energy of the flowing air mass per unit time. That is power available in the wind

P= (Cp AρV^3)/2 ……. (1)

where ρ is the wind density, A is the area of the rotor disk, v is the incoming wind speed, and Cp is the power coefficient.

2) Mechanical components

- Drive Train Modeling

The drive train connects the DFIG rotor with the aerodynamic rotor, and therefore, it transmits the mechanical power to the electrical generator through the rotating shafts and the gearbox.

$T_e = T_L + J\, d\omega_r/dt + B\omega_m$..... (2)

T_e is electromagnetic torque of generator, T_L is mechanical torque from generator shaft, , J_{wt} is moment of inertia of wind turbine, ω_m is rotor mechanical speed.

- *Wind Turbine Topologies*

a) Fixed Speed Wind Turbine (Type A) & Variable speed wind turbine.
b) Type B wind turbine (WRIG with soft starter)
c) Type C wind turbine (DFIG with partial scale converter)
d) Type D wind turbine (DFIG/PMSG with Full scale converter)

Here DFIG based Type C configuration corresponds to the limited variable speed wind turbine. The partial scale frequency converter performs the reactive power compensation and the smoother grid connection. It has a wider range of dynamic speed control. [12].

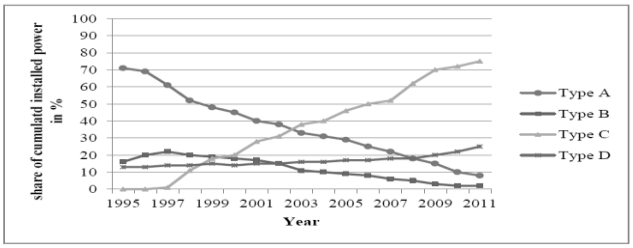

Fig 3World share of cumulative installed wind power for different wind turbines

3) Electrical components

B. DFIG

1) Field Oriented Control Theory

The overall control strategy of the machine is divided in two ways, one is scalar control and the other is vector control. The limitations of scalar control give an importance to vector control. The basic of the vector control theory is d-q theory. To understand vector control theory knowledge about d-q theory is necessary.

$$\begin{bmatrix} V_a \\ V_b \\ V_c \end{bmatrix} = \frac{2}{3}\begin{bmatrix} cos\theta & sin\theta & 1 \\ \cos(\theta - 120^0) & \sin(\theta - 120^0) & 1 \\ \cos(\theta + 120^0) & \cos(\theta + 120^0) & 1 \end{bmatrix}\begin{bmatrix} V_{qs}^s \\ V_{ds}^s \\ V_{0s}^s \end{bmatrix} \quad \ldots\ldots\ldots\ldots\ldots\ldots\ldots\ldots\ldots\ldots\ldots\ldots \quad (3)$$

2) Mathematical Modelling of DFIG in dq reference frame

This model is composed of four electrical differential equations (two equations for both the stator and rotor voltages) and one mechanical differential equation (included in the drive train model). The equivalent circuit diagram of an induction machine is shown [8]

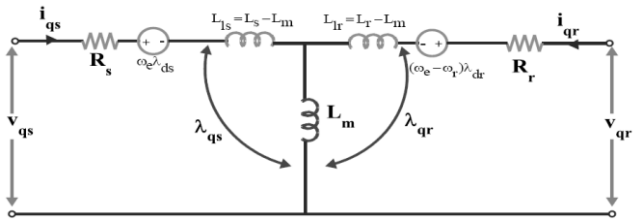

Fig4 Dynamic d-q equivalent circuit of DFIG (q-axis circuit)

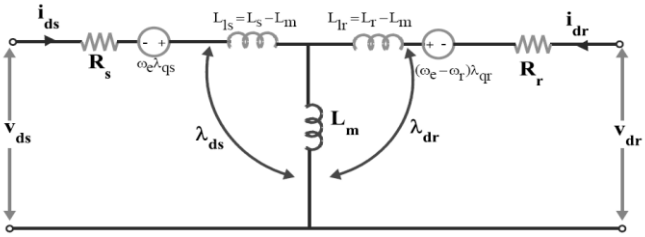

Fig5 Dynamic d-q equivalent circuit of DFIG (d-axis circuit)

In this figure the machine is represented as two phase machine

$V_{qs}=R_s i_{qs}+d\lambda_{qs}/dt+ \omega_e\lambda_{ds}$) …… (4)

$V_{qr}=R_r i_{qr}+ d\lambda_{qr}/dt+ (\omega_e-\omega_r)\lambda_{dr}$ ….……(5)

$V_{ds} =R_s i_{ds} +d\lambda_{ds}/dt - (\omega_e\lambda_{qs})$ .....……(6)

$V_{dr} =R_s i_{dr} +d\lambda_{dr}/dt -(\omega_e-\omega_r)\lambda_{qr}$ ……....(7)

The flux linkages are expressed as follows:

$$\lambda_{qs} = L_{ls}i_{qs} + L_m(i_{qs} + i_{qr}) = L_s i_{qs} + L_m i_{qr} \quad \ldots\ldots(8)$$

$$\lambda_{qr} = L_{lr}i_{qr} + L_m(i_{qs} + i_{qr}) = L_r i_{qr} + L_m i_{qs} \quad \ldots\ldots(9)$$

$$\lambda_{ds} = L_{ls}i_{ds} + L_m(i_{ds} + i_{dr}) = L_s i_{ds} + L_m i_{dr} \quad \ldots\ldots(10)$$

$$\lambda_{dr} = L_{lr}i_{dr} + L_m(i_{ds} + i_{dr}) = L_r i_{dr} + L_m i_{ds} \quad \ldots\ldots(11)$$

where index m denotes magnetizing. [18]

3) *Constructional features of DFIG*

Wind turbines use a doubly-fed induction generator (DFIG) consisting of a wound rotor Induction generator and an AC/DC/AC IGBT-based PWM converter. The d-q theory is also known as reference frame theory.All these components are connected in block as shown in Fig 1.

The basic components of the system are as follows.

- DFIG (Wound rotor type Induction machine)
- PWM Voltage source converters (Grid side and Machine side converter)
- Utility grid
- PI controller

Description of different components is as follows:

i. *Grid Side Converter*

The main objective of the grid side converter is to maintain dc-link voltage constant for the necessary action. The voltage oriented vector control technique is approached to solve this issue. Below the synchronous speeds this converter works as a rectifier and above synchronous speeds this converter works as an inverter to supply all generated power to the grid at a constant DC link voltage.

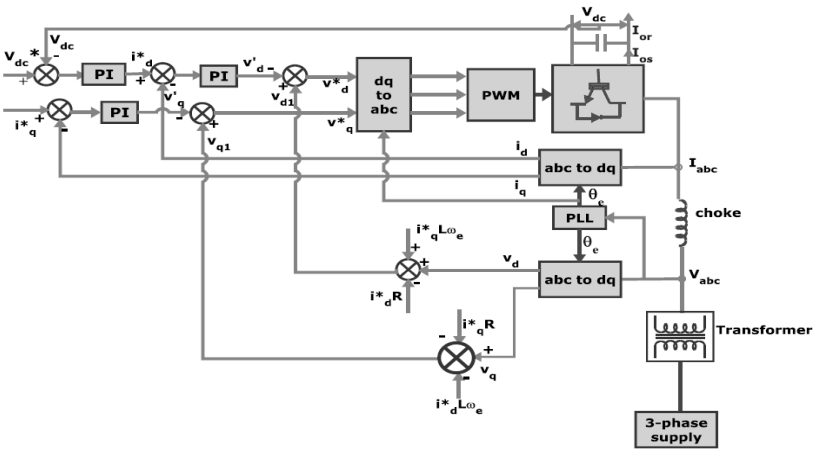

Fig6 Block diagram of GSC (Grid side converter control

- Vector Control Scheme of grid side PWM VSC

Grid Side Converter is used to maintain the dc-link voltage constant. The voltage oriented vector control technique is used to control the GSC. The PWM converter is current regulated with the direct axis current is used to regulate the DC link voltage where as the quadrature axis current component is used to regulate the reactive power .The reactive power demand is set to zero to ensure the unit power factor operation.

$$V_q^* = V_q - i_q^* R + \omega_e L i_d^* - V_{d'}$$

Where vd1 and vq1 are the two phase voltages found from va',vb' and vc' using d-q theory.

Phase Locked Loop block is used to measure the system frequency and provides the phase synchronous angle θ for the d-q transformations block.

ii. *Rotor Side Converter*

The main purpose of the machine side converter is to maintain the rotor speed constant irrespective of the wind speed.. The active power flow is controlled through i_{dr}. The reactive power flow is controlled through i_{qr}.To ensure unit power factor operation like grid side converter the reactive power demand is also set to zero (Q_{ref} = 0).The currents i_q and i_d can be controlled using V_q and V_d respectively.

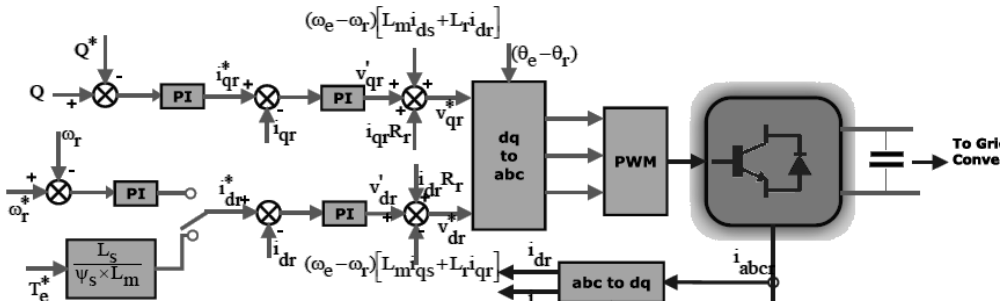

Fig7 Block diagram of RSC (Rotor side converter control)

- Vector Control Scheme of rotor side PWM VSC

Vector control strategy has been implemented to control the active power and reactive power flow of the machine using the rotor current components. A Proportional-Integral (PI) regulator is used to reduce the power error to zero. The output of this regulator is the reference rotor current Iqr*_ref that must be injected in the rotor by converter RSC. The actual Iqr component is compared to Iqr*_ref and the error is reduced to zero by a current regulator (PI). Now, the actual rotor currents *Ird* and *Irq* are compared with the reference rotor currents *I* rd* and *I*rq* to generate the control signals for the rotor side converter .

$V_{dr}^{*}=V_{dr}'+R_r i_{dr}-(\omega_e-\omega_r)\,[L_r i_{qr}+L_m i_{qs}]$ ..... (12)

$V_{qr}^{*}=V_{qr}'+R_r i_{qr}+(\omega_e-\omega_r)\,[L_r i_{dr}+L_m i_{ds}]$ .....(13)

Where v'_{dr} and v'_{qr} are found from the current errors processing through standard PI controllers

C. FUEL CELL

A fuel cell is an electro chemical device that converts the chemical energy of the fuel (hydrogen) into electrical energy. It is cantered on a chemical reaction between fuel and the oxidant generally oxygen) to produce electricity where water and heat are by-products. This conversion of the fuel into energy takes place without combustion. The efficiency of the fuel cells ranges from 40-60% and can be improved to 80-90% in cogeneration applications. Fuel cell technology is a relatively new energy-saving technology that has the potential to compete with the conventional existing generation facilities.

1. Operating principle:

The structure and the functioning of a fuel cell is similar to that of a battery except that the fuel can be continuously fed into the cell. The cell consists of two electrodes, anode (negative electrode) and cathode (positive electrode) separated by an electrolyte. Fuel is fed into the anode where electrochemical oxidation takes place and the oxidant is fed into the cathode where electrochemical reduction takes place to produce electric current and water is the primary product of the cell reaction

The typical anode and cathode reactions for a hydrogen fuel cell are given by Equations [16]

$H2$ ----------$2H^{+}+2e^{-}$ ..... (14)

½ $O2 + 2H^{+}+2e^{-}$ ------$H2O$ ..... (15)

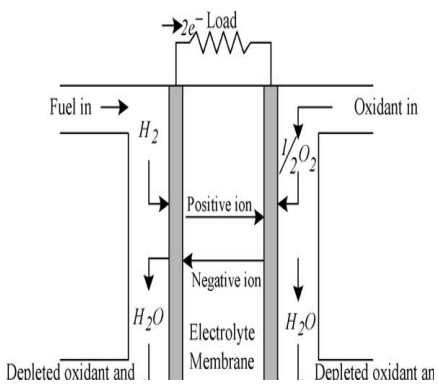

Fig8 Schematic of an individual fuel cell

2. *Types of fuel cells*:

Fuel cells are classified according to the type of electrolyte used. The various types of fuel cells in the increasing order of their operating temperature are
• Proton exchange membrane fuel cell (PEMFC-175o F)
• Phosphoric acid fuel cell (PAFC-400o F)
• Molten carbonate fuel cell (MCFC-1250o F)
• Solid oxide fuel cell (SOFC-1800o F)
The SOFC is a high-temperature operating fuel cell which has high potential in stationary applications [16]

3. *Modelling of SOFC*

The modelling of SOFC is based on the following assumptions.
- The fuel cell temperature is assumed to be constant.
- The fuel cell gasses are ideal.
- Nernst's equation applicable.

By Nernst's equation dc voltage fc V across stack of the fuel cell at current I is given by the following equation.
.
$V_{fc}= N_0[E_0+RT/2Fln(pH_2pO_2^{0.5}/pH_2O)]-rI_{fc}$ ……(16)
V_{fc} – Operating dc voltage (V)
E_0 – Standard reversible cell potential (V)
pi – Partial pressure of species i (Pa)
r – Internal resistance of stack (S)
I – Stack current (A)
N_0 – Number of cells in stack
R – Universal gas constant (J/ mol K)
T – Stack temperature (K)
F – Faraday's constant (C/mol) [17]

D. Simulation of DFIG-SOFC-Grid Test System

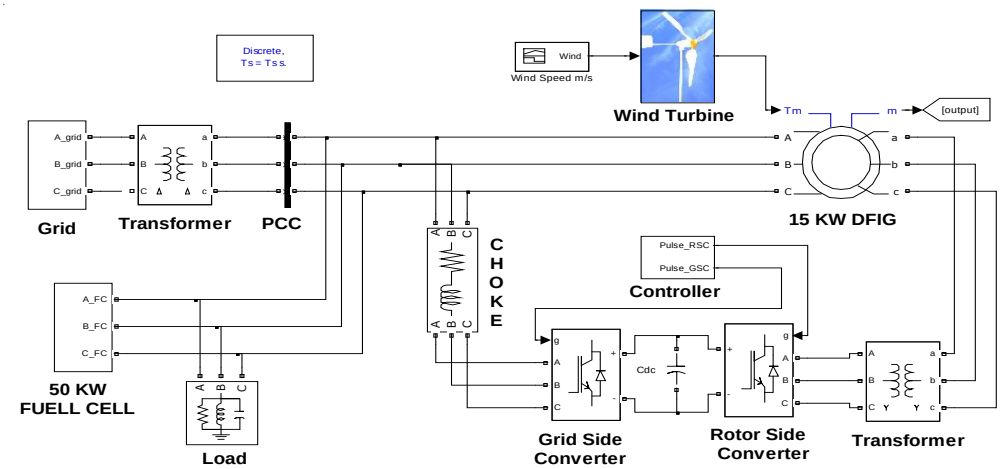

Fig9.Simulink configuration of DFIG test system

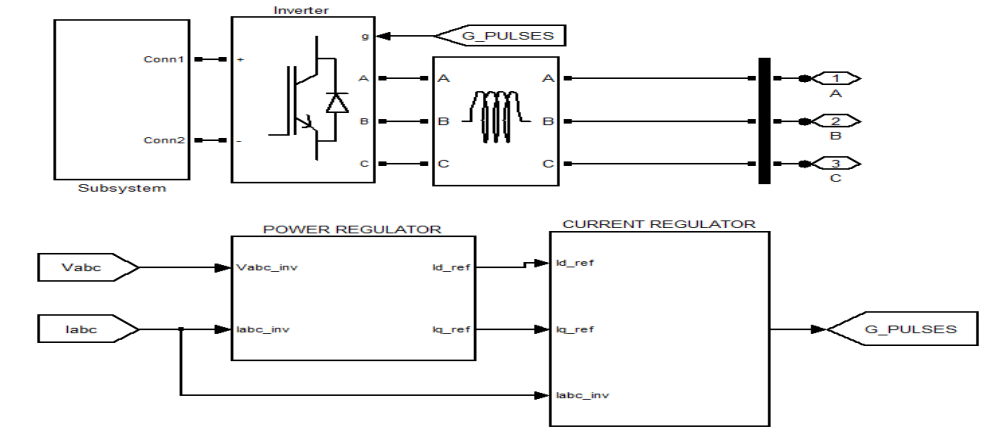

Fig10. Simulink sub system model of Fuel Cell

E. SIMULATION RESULTS

In this test system the wind speed is varied continuously throughout the simulation time (t = 5 sec.).During wind speed variation, the DFIG output voltage is maintained constant at one per unit (1 pu).With variation in wind speed the dc link voltage of DFIG controller is fairly constant at set value (V_{dc}=830V).The active and reactive power of DFIG is also remains constant despite of wind speed variation. Performance of 15kW DFIG based WECS shown in figure in terms of DC constant voltage Active Power and Reactive power which is zero at unity power factor.

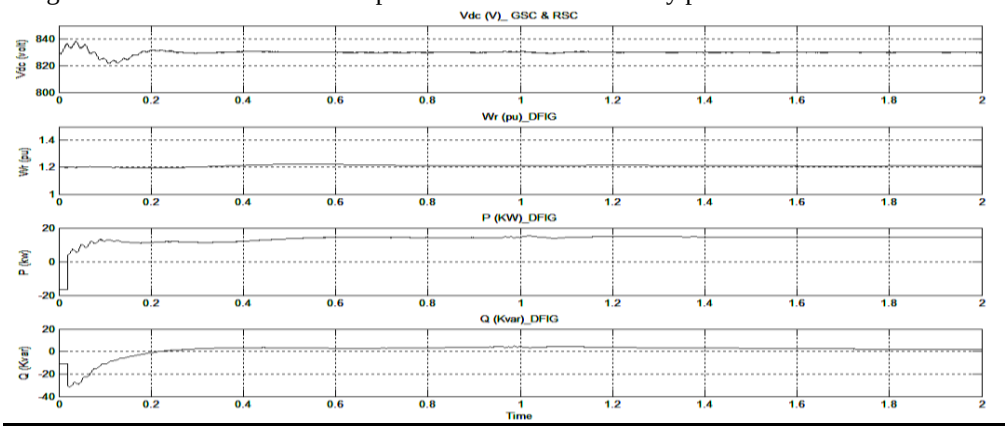

Fig11. DC link voltage (V_{dc}), Speed (ω_r), Active Power (P) and Reactive Power (Q) of DFIG

At t = 0.5 sec, when the load is increased from 30 to 100 KW, the power contribution from the system is shown in Fig. 12. It is observed that when the load is 30 KW, the power is supplied by DFIG and SOFC while the excess of generated power is feed to Grid. When the load demand is sudden increased to 100 KW, the remaining power is now drawn by grid. Also during this transient the whole system runs in exact synchronism without any oscillations.

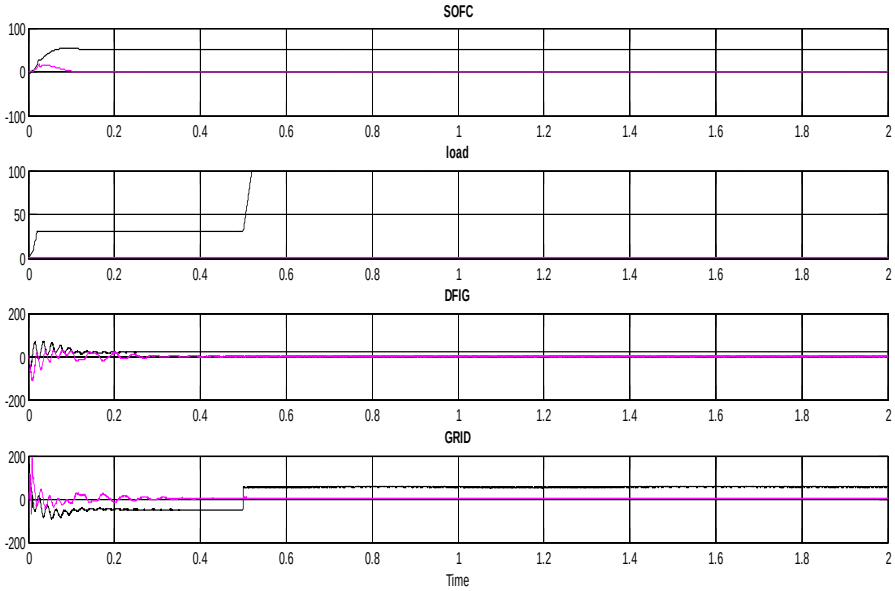

Fig12. Performance of DFIG, SOFC, load, grid active & reactive power at full load with t=0.5sec

III. CONCLUSION

Vector control scheme is very useful for controlling the grid side converter and rotor side converter; the system can work for any change in wind speed. The dc link voltage of converters, rotor speed, and active power and reactive power exchange between machine and grid is almost constant during all operations. The DFIG machine is perfectly Synchronised with the grid and sudden change in the load demand is met by sharing of power as per their rating. DFIG with back to back connected VSC's in rotor circuit have provided reduced converter cost, improved efficiency, suitable for large installations, high fault ride through capability during network disturbances, MPPT and flexible four quadrant operation.Distributed generation of hybrid renewable energy systems connected to the electrical grid is a good balance to the conventional energy production, which is polluting and finite. This paper has shown with its simulation results how a hybrid system composed by a wind turbine and a fuel cell satisfy such challenge.

ACKNOWLEDGEMENTS

Prof. Amol Barve received B.E. degree in Electrical Engineering from GEC Ujjain (M.P.) and M.Tech Degree from MANIT, Bhopal (M.P.). He is currently working as a Associate Professor in Electrical and Electronics Department LNCT Bhopal. His areas of interest include Power Electronics, Modelling and Simulation Programming.

Ritika Verma had completed BE degree from Truba Institute of Engineering and Information Techonlogy Bhopal affliated by Rajiv Gandhi Technical University, with first division hon's and pursuing M.E. in branch Power Electronics and system from LNCT Bhopal. Her areas of interest include Electrical machines, power electronics and general purpose simulation program.

Er. Narayn P Gupta received B.E. degree in Electrical Engineering from MITS Gwalior (M.P.) and M.Tech Degree from RGPV, Bhopal (M.P.). He is currently working as a Assistant Professor in Electrical and Electronics Engineering Department at OIST Bhopal. His areas of interest include Renewable Energy Sources, Micro Grid and Power Quality.

REFERENCE

[1]. Aghatehrani R., Lingling F. and Kavasseri R (2009), 'Coordinated Reactive Power Control of DFIG Rotor and Grid Sides Converters', IEEE Power & Energy Society General Meeting, pp. 1-6.

[2]. Bimbhara P.S. (2009), 'Generalized Theory of Electrical Machines', Khanna Publishers, New Delhi, 2009.

[3]. Blaabjerg F., Chen Z., Teodorescu R. and Iov F. (2006), 'Power Electronics in Wind Turbine Systems', IEEE Int. conf. on Power Electronics and Motion Control, pp. 1-11.

[4]. Blaabjerg F., Iov F., Chen Z., and Ma K. (2010), 'Power Electronics and Controls for Wind Turbine Systems', IEEE Int. Energy Conference, pp. 333-344.

[5]. Bose B. K. (2002), 'Modern Power Electronics and AC Drives', Prentice-Hall, Inc., New Delhi 1st edition 34-45.

[6]. Breban S., Radulescu M. and Robyns B. (2010) 'Direct Active and Reactive Power Control of Variable Speed Doubly Fed Induction Generator on Micro Hydro Energy Conversion System', Int. Conf. on Electrical Machines, pp.1-6.

[7]. EI-Sattar A.A., Saad N.H. and Shams M.Z. (2006), 'Modeling and simulation of doubly fed induction generator variable speed wind turbine' IEEE Int. conf. on Power systems, Vol. 2, pp. 492-497.
[8]. Ganon R., Turnel G., Larose C., Brochu J., Sybille G., Fecteau M.(2010), 'Large-scale Real-Time Simulation of Wind Power Plants into Hydro-Quebec Power System', Int. workshop on Large scale Integration of wind power into power system, pp.1-8.
[9]. Goel P. K., Singh B., Murthy S. S. and Kishore N. (2011), 'Isolated wind hydro hybrid system using cage generators and battery storage', IEEE transactions on industrial electronics, vol. 58, no. 4, pp.1141-1153.
[10]. Goel P.K, Murthy S.S, Singh B. and Kishore N. (2010), 'Modeling and Control of Autonomous Wind Energy Conversion System with Doubly Fed Induction Generator', IEEE Int. conf. on Power Electronics, Drives and Energy systems, pp. 1-8.
[11]. Goel P.K, Murthy S.S, Singh B. and Kishore N. (2011), 'Parallel Operation of DFIGs in Three-Phase Four-Wire Autonomous Wind Energy Conversion System', IEEE trans. on Industry applications, vol. 47, no. 4, pp. 1872-1883.
[12]. Jiang Y. and Zhang Q. (2011), 'Research on the Control Strategy of Wind Turbine with a Doubly-fed Generator and its Simulation', IEEE International Forum on Strategic Technology, Vol.1, pp. 624-627
[13]. Krause P. C., Wasynczuk O., Sudhoff S. D. (2002), 'Analysis of electric machinery and drive systems', John Wiley and Sons, UK 114-120.
[14]. Luna A. and Arnaltes S. (2011), 'Simplified Modeling of a DFIG for Transient Studies in Wind Power Applications', IEEE transactions on Industrial Electronics, vol. 58, no. 1, pp. 9-20.
[15]. Murthy S.S, Singh B., Goel P.K. and Tiwari S.K. (2007) 'A Comparative Study of Fixed Speed and Variable Speed Wind Energy Conversion Systems Feeding the Grid', IEEE conf. Power Electronics and Drive systems, pp. 736-743.
[16]. A. Kirubakaran *, Shailendra Jain, R.K. Nema "A review on fuel cell technologies and power electronic interface" *Renewable and Sustainable Energy Reviews* vol13 no 9 (2009).
[17]. Meng Ni(2012)"Modeling of SOFC running on partially pre-reformed gas mixture" International journal o f hydrogen energy 37 1731 e1745 .
[18]. Nagasmitha Akkinapragada and Badrul H. Chowdhury " SOFC-based Fuel cells for load following Stationary Applications" IEEE 1-4244-0228-2006
[19]. Pena Ruben , Cardenas Roberto, Proboste Jose, Clare Jon " Wind-Diesel Generation using Doubly Fed Induction Machines" IEEE Transaction on Energy Conversion,vol.23,No.1 March 2008.
[20]. R. Pena, J. C. Clare, G. M. Asher, "Doubly fed induction generator using back-to-back PWM converters and its application to variable-speed wind-energy generation," *IEE Proc. Elect. Power Appl., vol. 143, no. 3, pp. 231-241, 1996.*
[21]. Sarrias R., Fernández M., Garcíab A. and Juradoc F. (2012), 'Coordinate operation of power sources in a doubly-fed induction generator wind turbine/battery hybrid power system', Int. Journal of Power Sources, Vol.205, 354–366.
[22]. Singh B., Aggarwal S. and Kandpal T.C. (2010), 'Performance of Wind Energy Conversion System using a Doubly Fed Induction Generator for Maximum Power Point Tracking', IEEE Industry App. Society Annual meeting, pp. 1-7.
[23]. T. Sun, Z. Chen, F. Blabejerg, "Flicker study on variable speed wind turbines with doubly fed Induction Generators," *IEEE Trans. Energy Convers., vol. 20, no. 4, pp.896-905, 2005.*
[24]. Verma V., Pant P., Suresh B. and Singh B. (2011), 'Decoupled Indirect Current Control of DFIG for Wind Energy Applications', IEEE Int. conf. on Power Electronics, pp. 1-6.
[25]. Yao X., Tian L., Xing Z. and Su X. (2009) , 'Dynamic Model and Simulation of Doubly Fed Induction Generator Wind Turbine', IEEE Int. conf. on Automation and Logistics, pp. 1667-1671.
[26]. Slavomir Seman,, Jou"ko Niiranen, and Antero Arkkio "Ride-Through Analysis of Doubly Fed Induction Wind-Power Generator Under Unsymmetrical Network Disturbance" IEEE transactions on power systems.
[27]. Fuel cell 2000:Fuel cell basic: Application, www.fuelcells.org/basics/apps.